WHITE

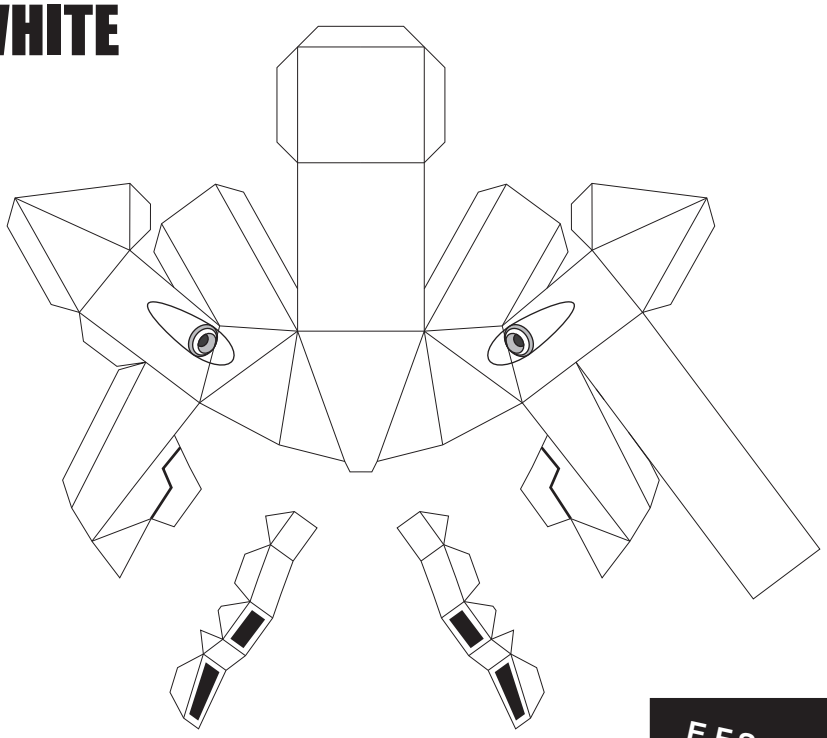

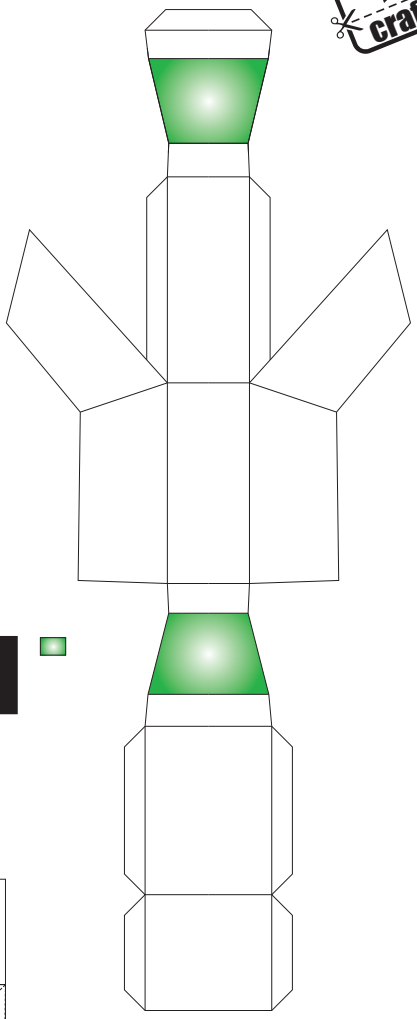

E.F.S.F. RX-93

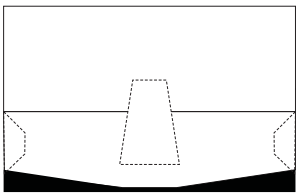

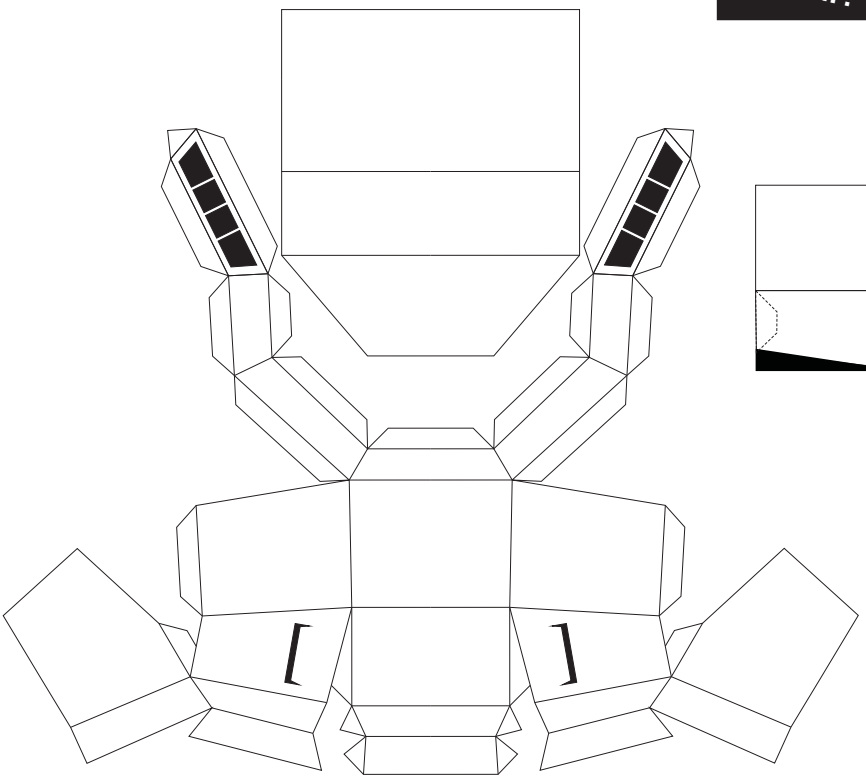

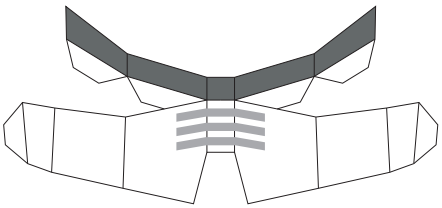

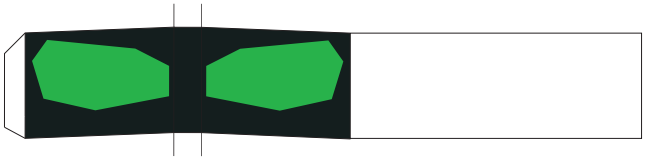

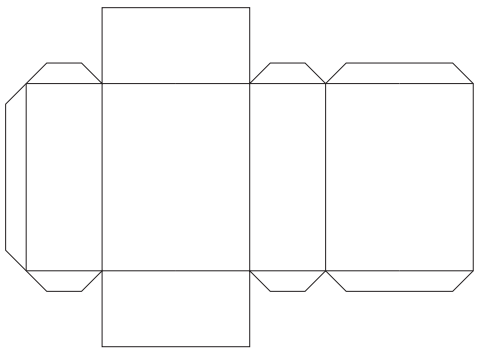

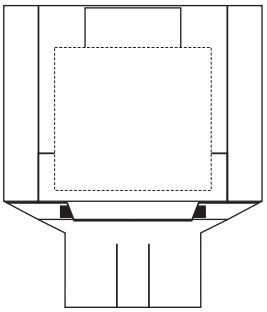

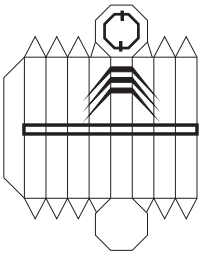

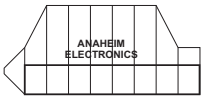

SD RX-93 ν GUNDAM VER.ZAN

E.F.S.F. RAY'S CUSTOMIZE MOBILE SUIT FOR NEWTYPE

WHITE

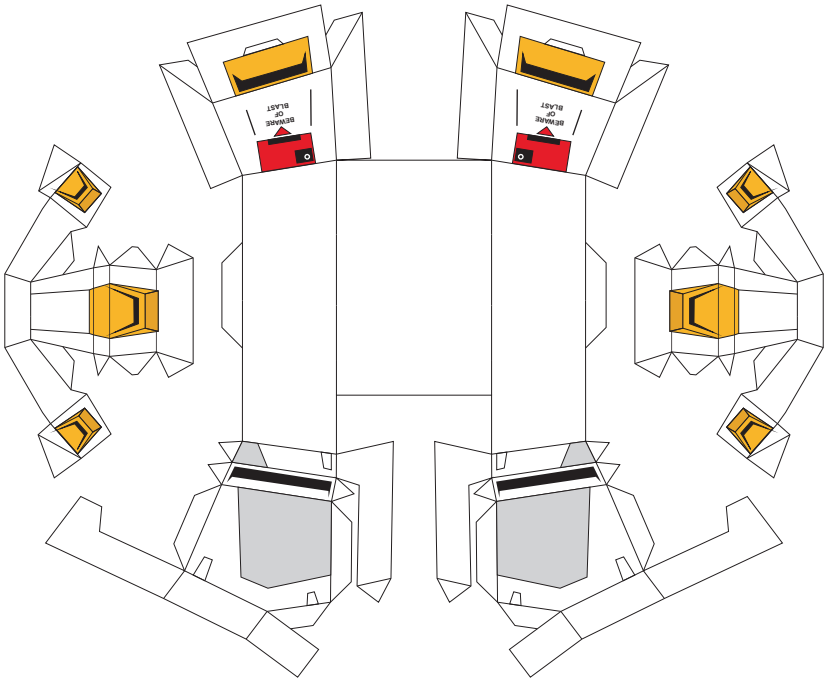

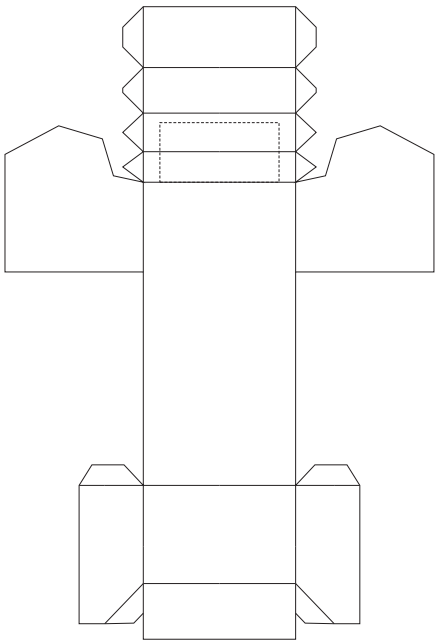

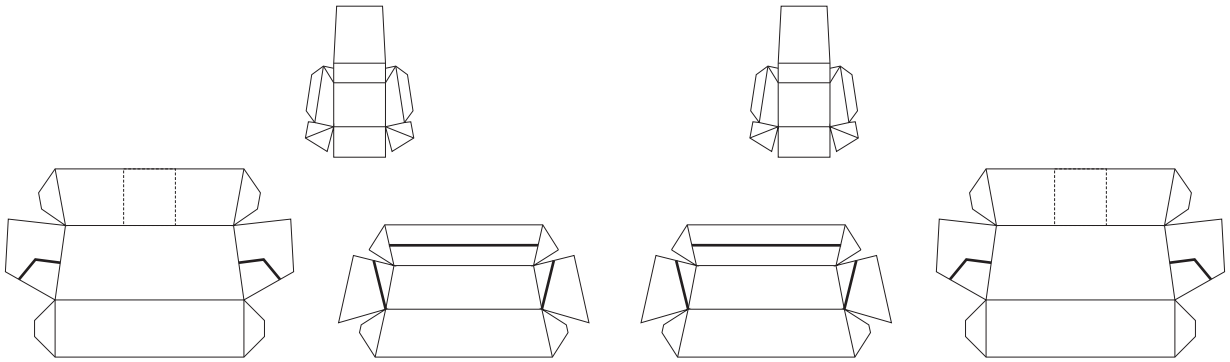

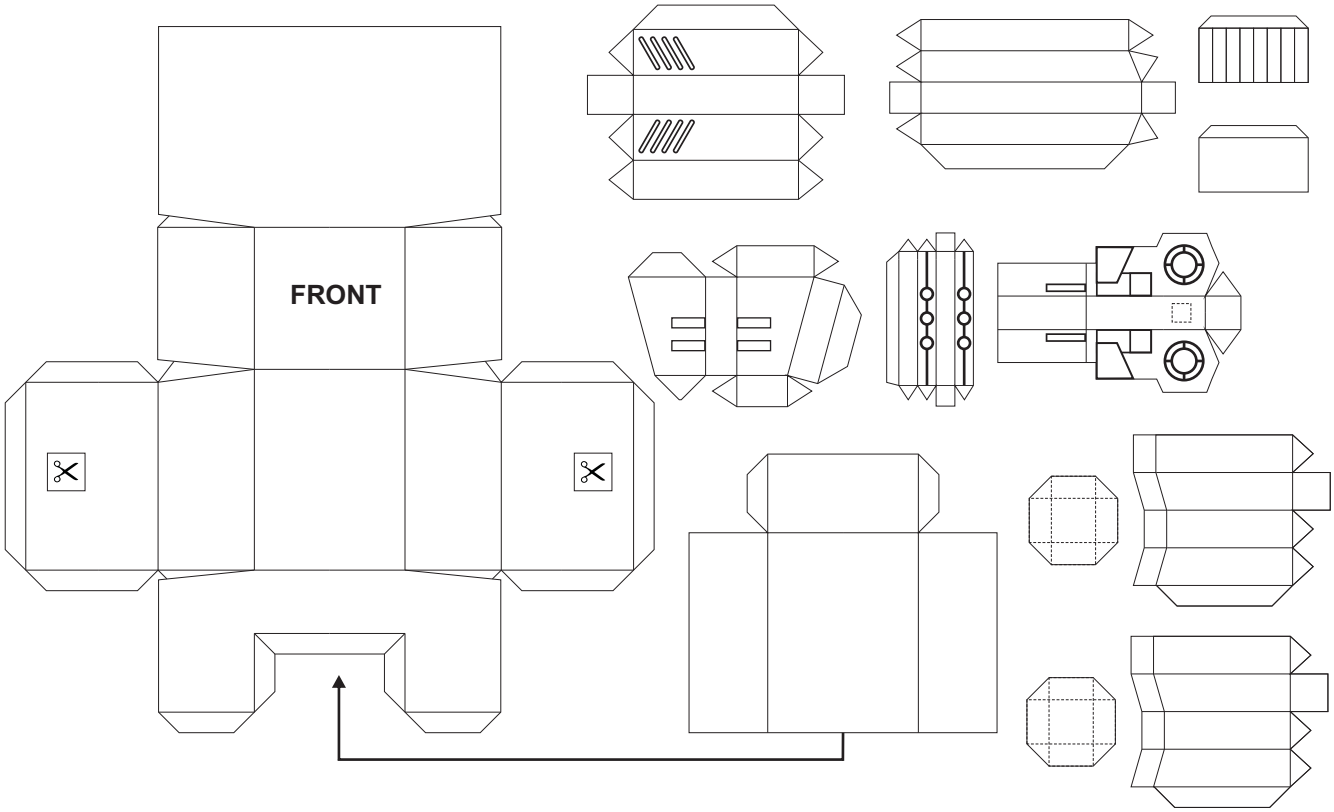

SD RX-93 ν GUNDAM VER.ZAN

E.F.S.F. RAY'S CUSTOMIZE MOBILE SUIT FOR NEWTYPE

WHITE

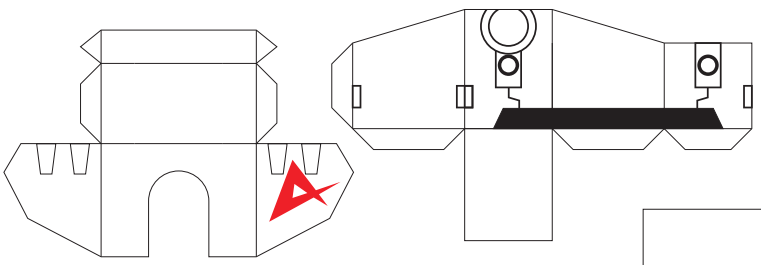

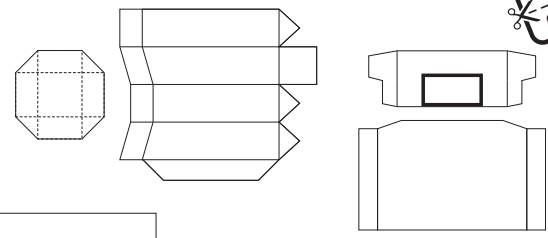

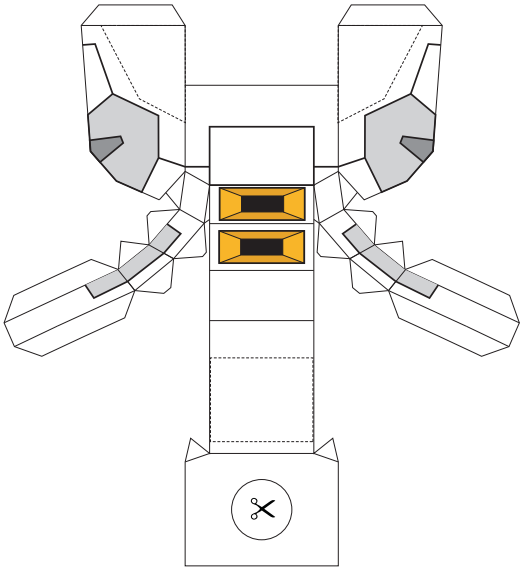

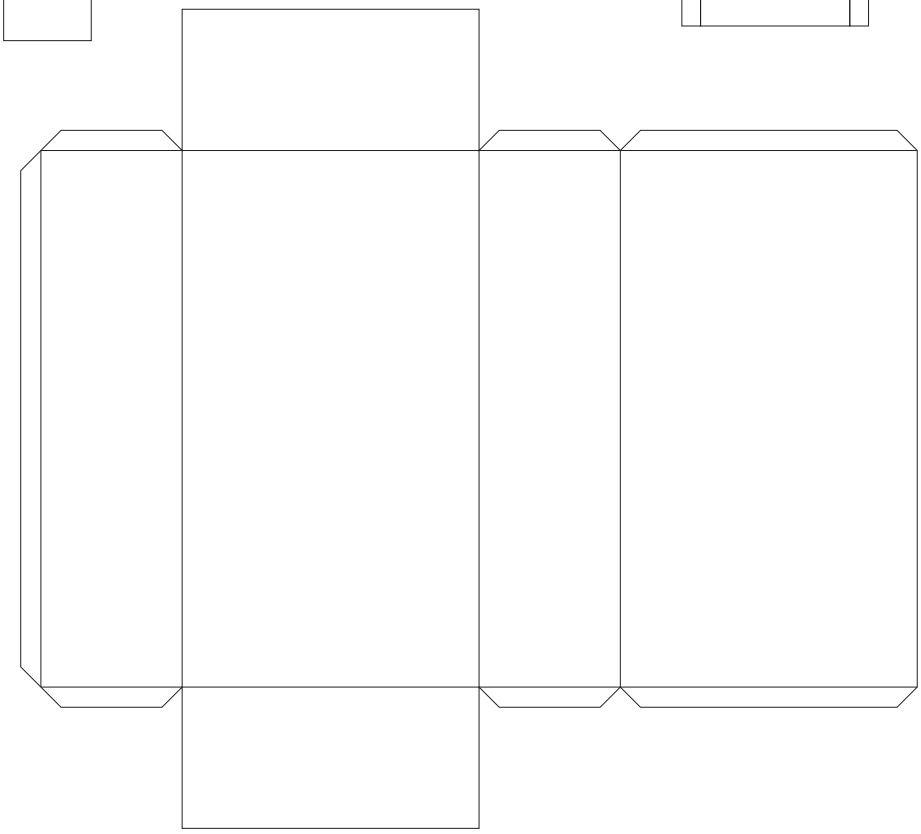

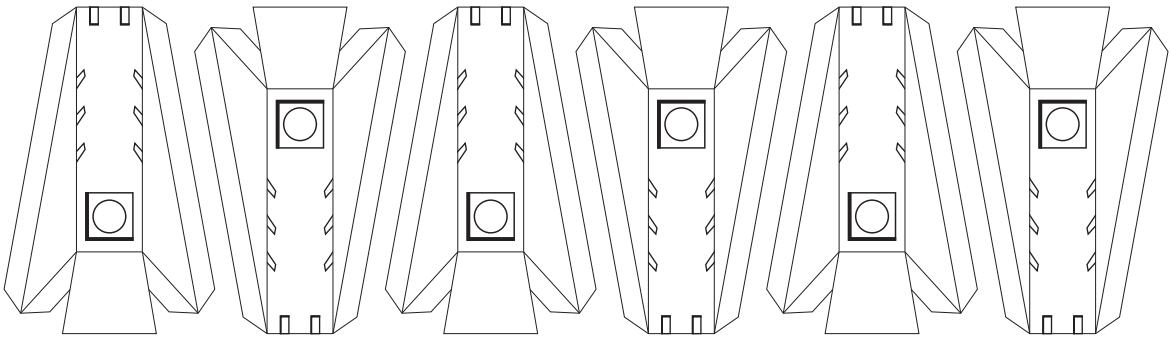

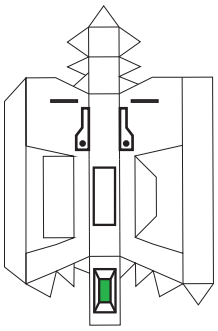

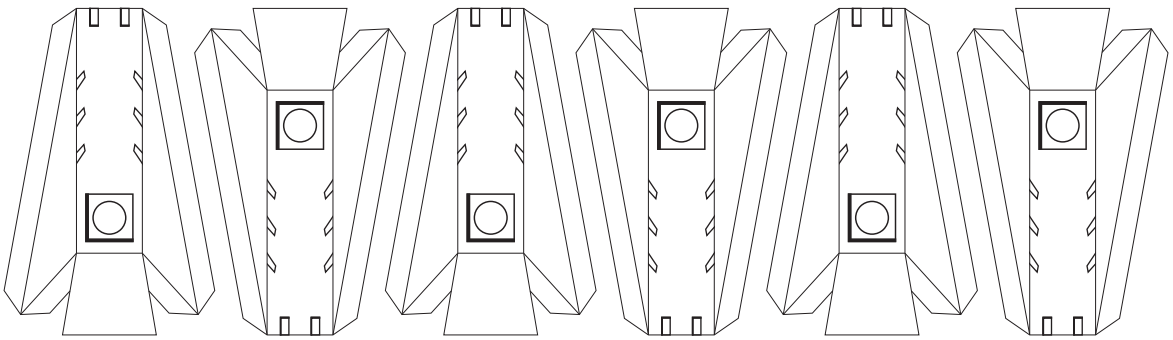

SD RX-93 ν GUNDAM VER.ZAN

E.F.S.F. RAY'S CUSTOMIZE MOBILE SUIT FOR NEWTYPE

WHITE

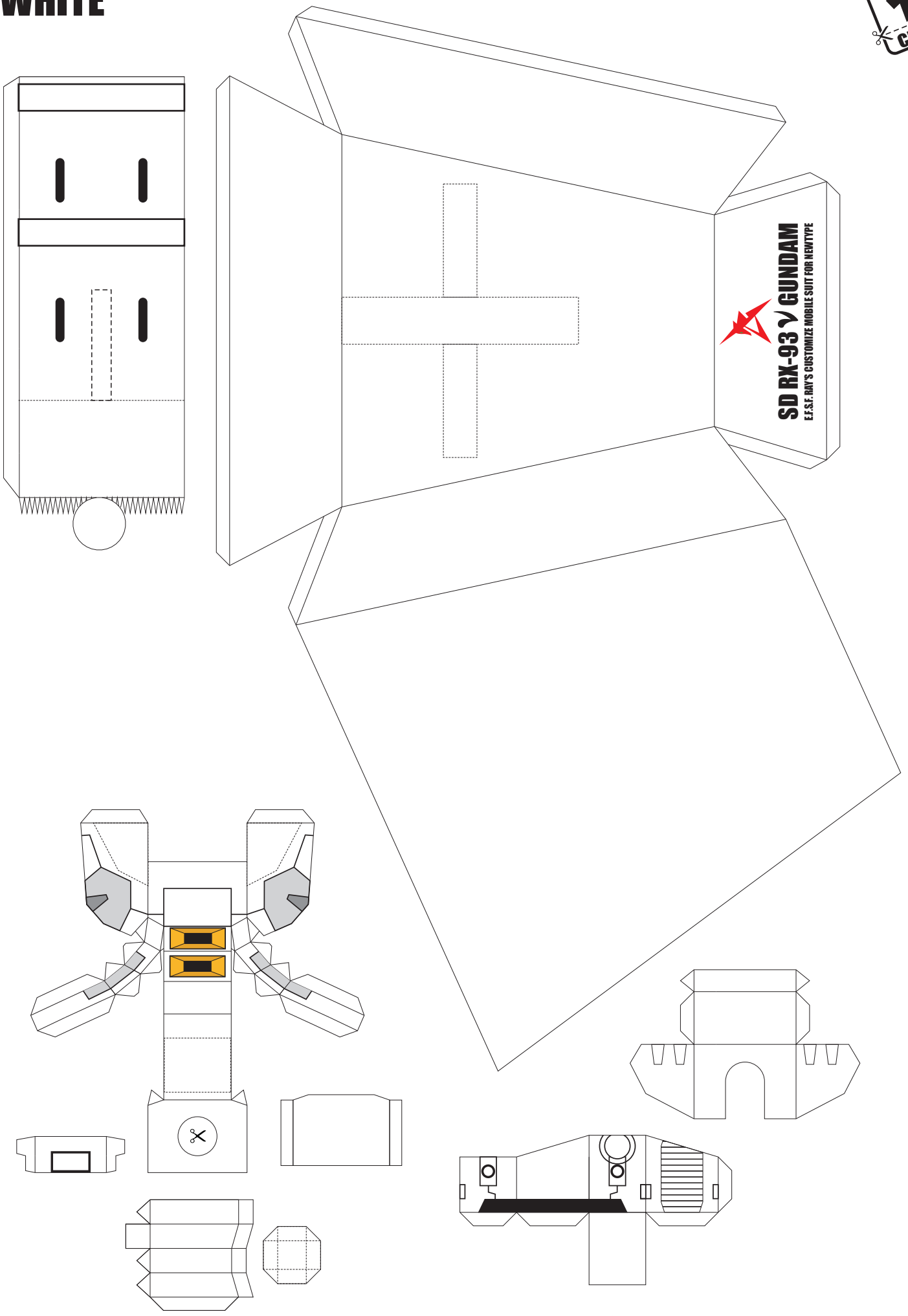

SD RX-93 ν GUNDAM VER.ZAN
E.F.S.F. RAY'S CUSTOMIZE MOBILE SUIT FOR NEWTYPE

WHITE

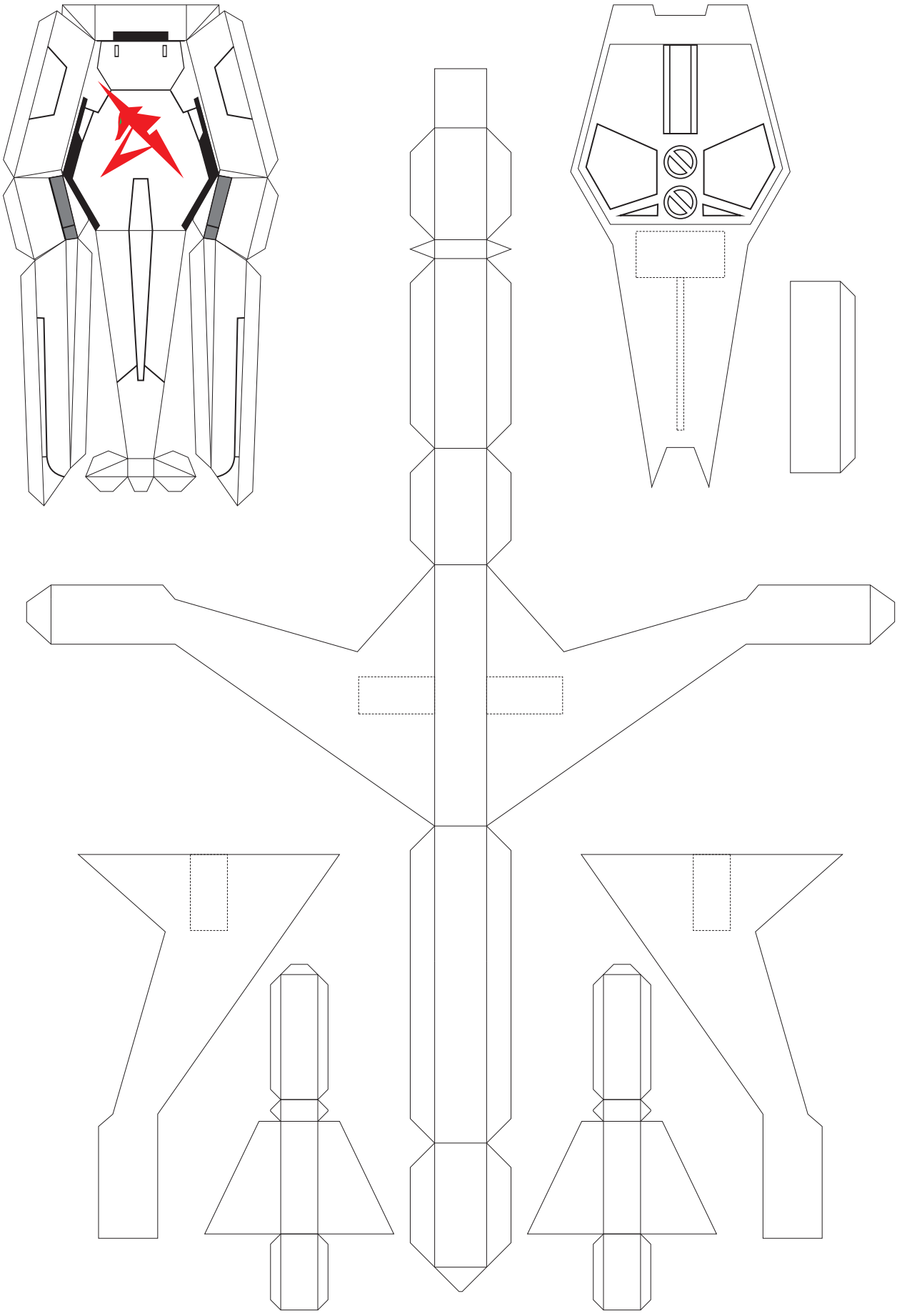

SD RX-93 ν GUNDAM VER.ZAN

E.F.S.F. RAY'S CUSTOMIZE MOBILE SUIT FOR NEWTYPE

BLACK

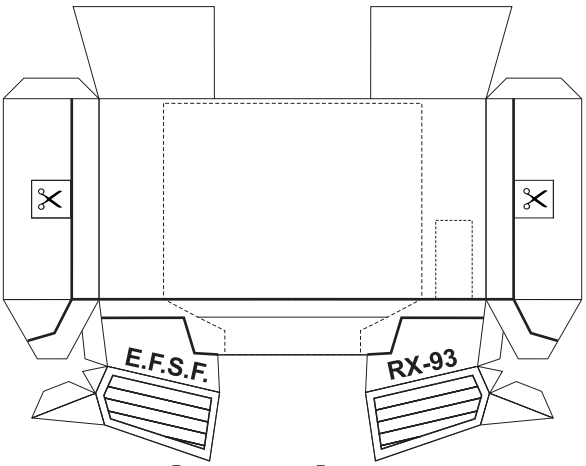

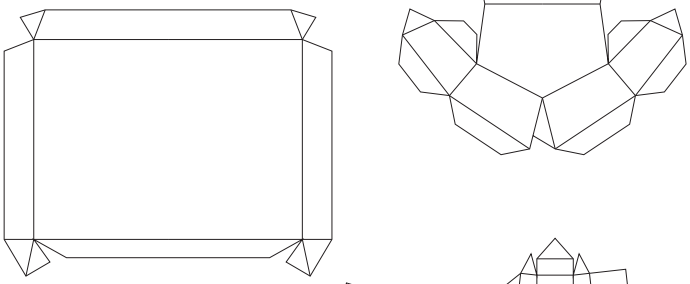

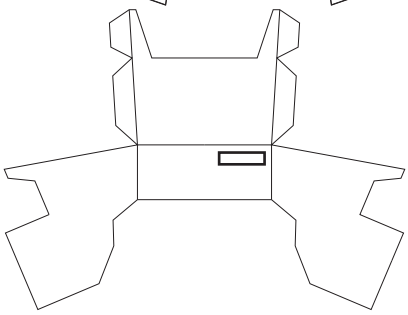

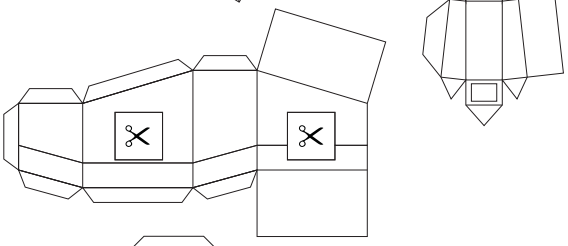

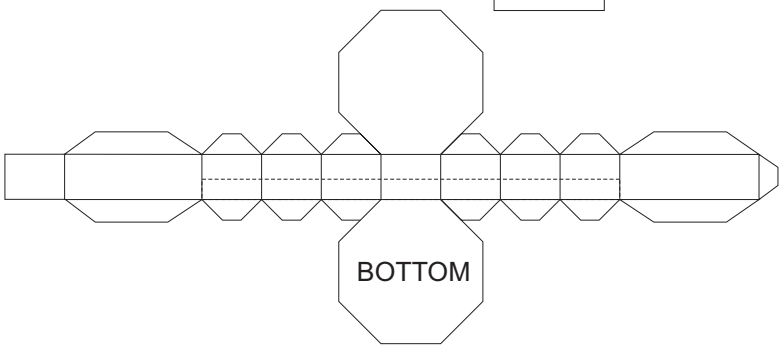

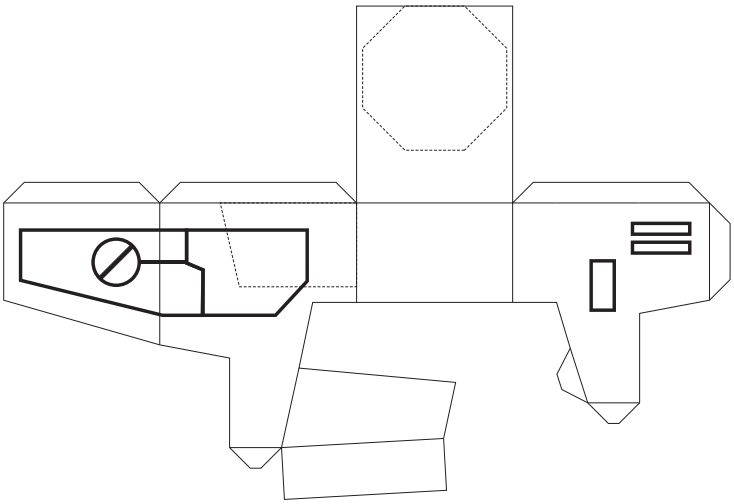

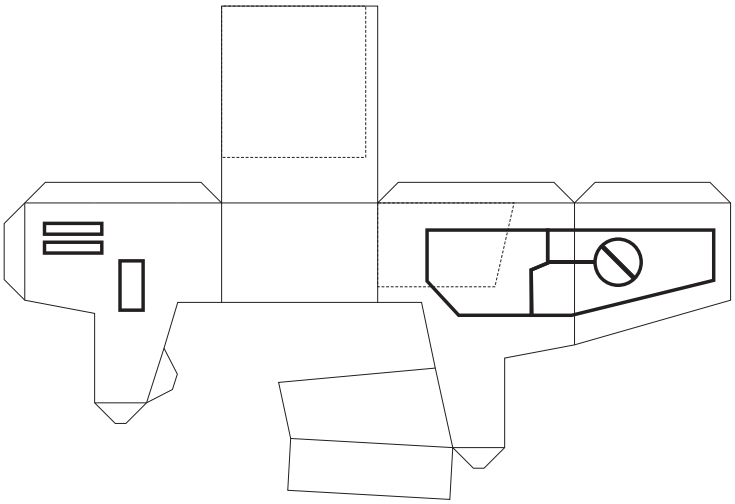

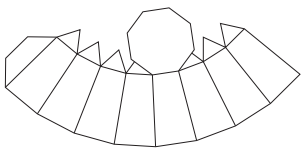

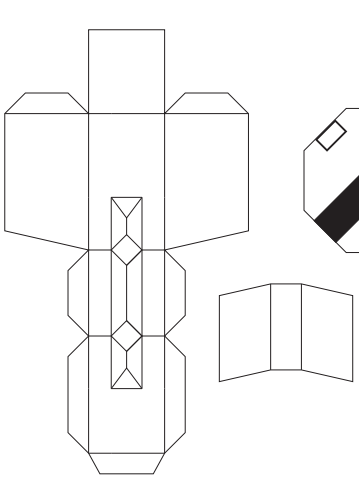

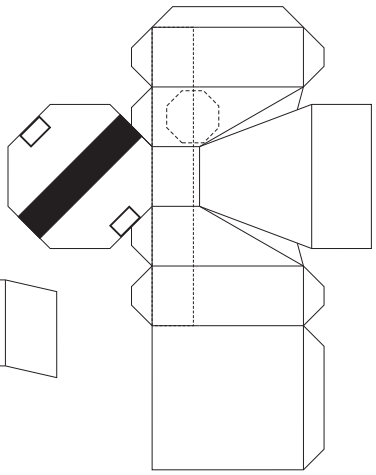

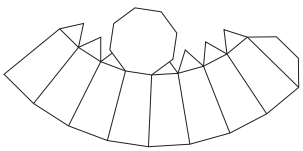

SD RX-93 ν GUNDAM VER.ZAN

E.F.S.F. RAY'S CUSTOMIZE MOBILE SUIT FOR NEWTYPE

BLACK

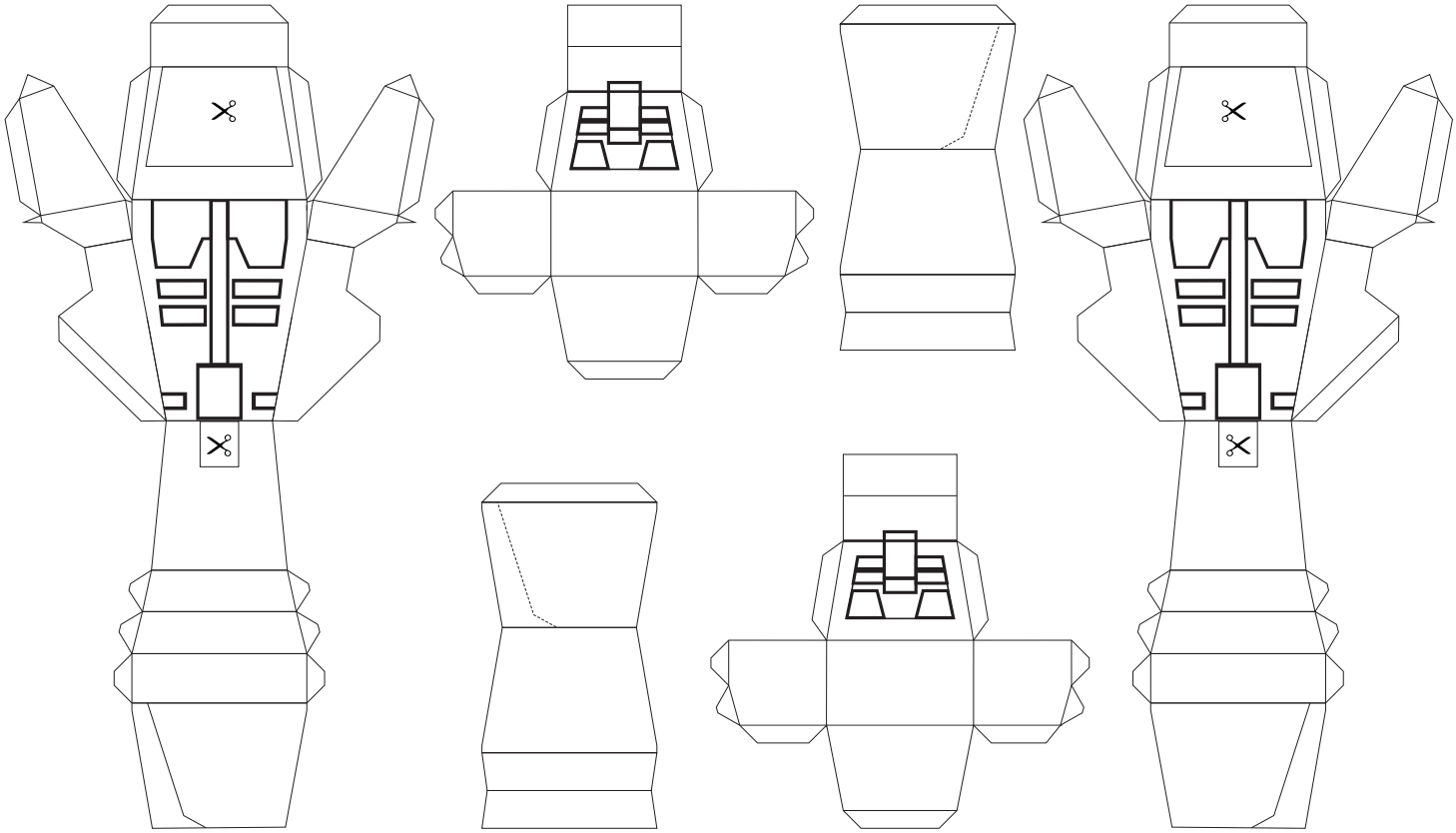

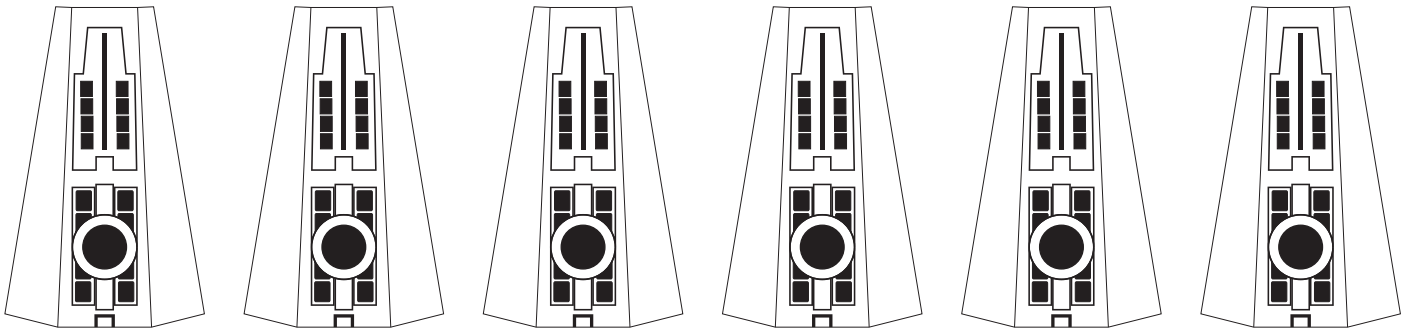

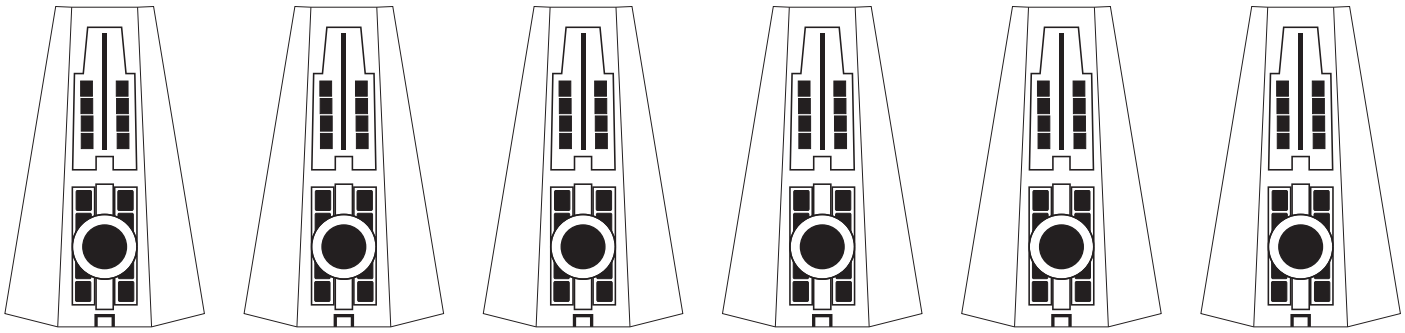

SD RX-93 ν GUNDAM VER.ZAN

E.F.S.F. RAY'S CUSTOMIZE MOBILE SUIT FOR NEWTYPE

BLACK

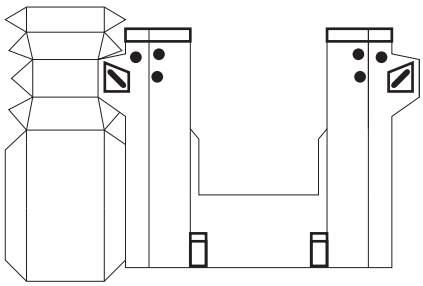
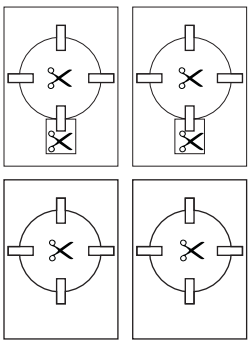
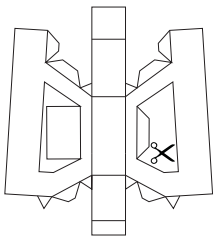
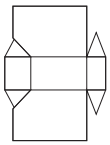
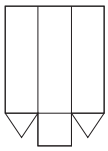
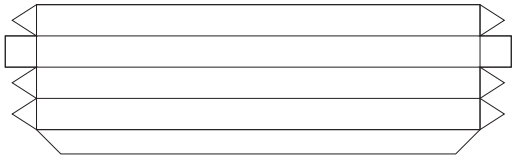
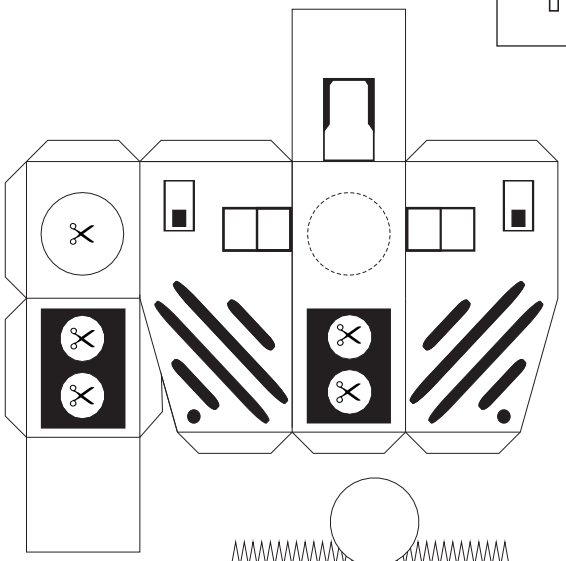
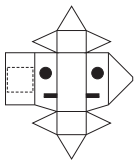
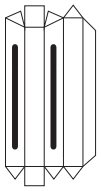
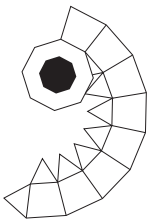
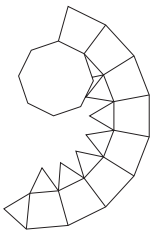
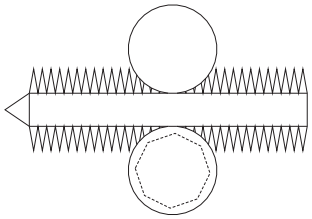
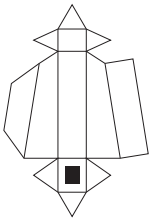
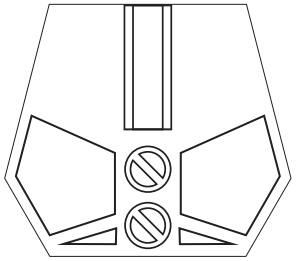
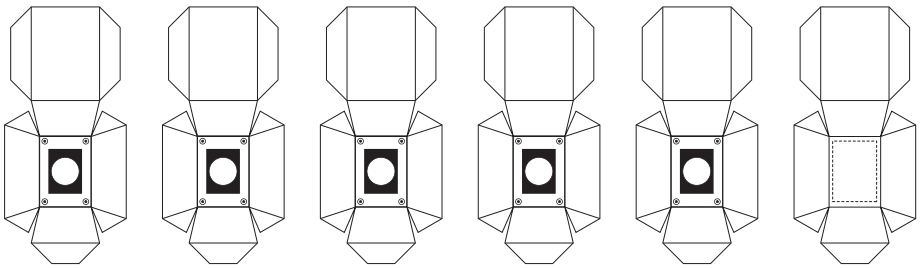
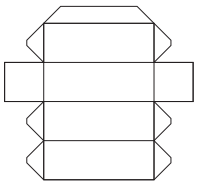
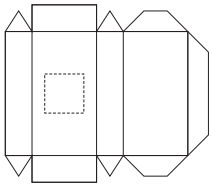
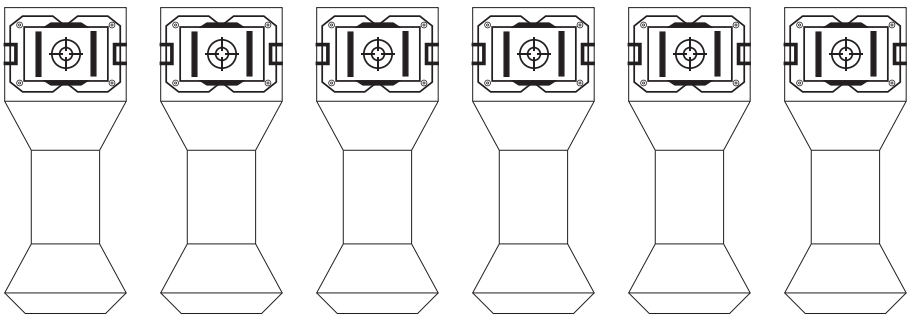

GREY

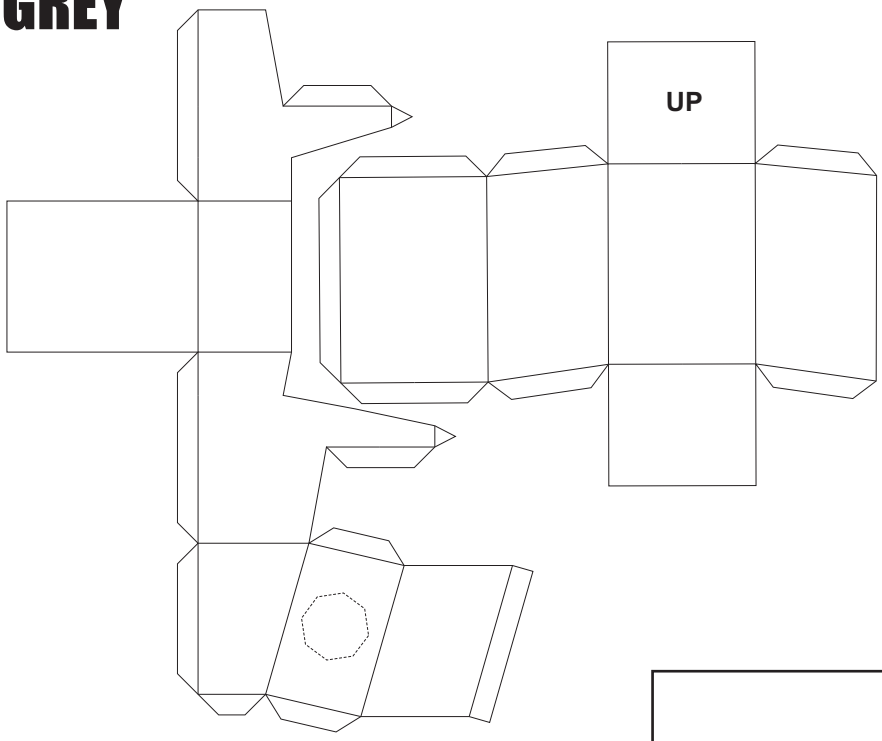

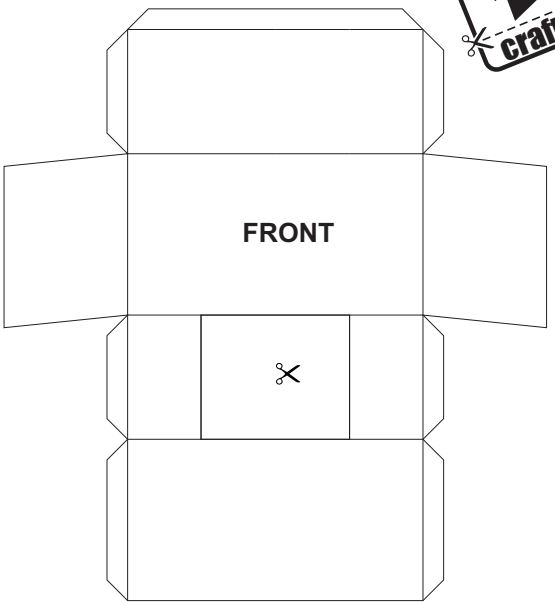

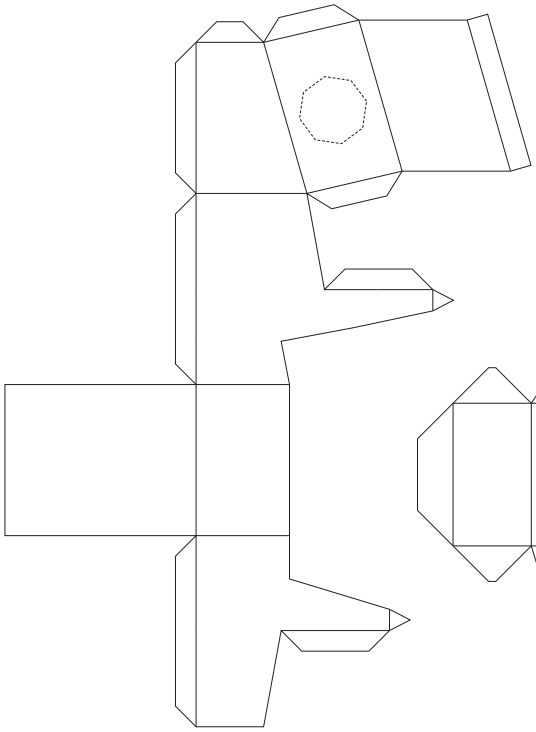

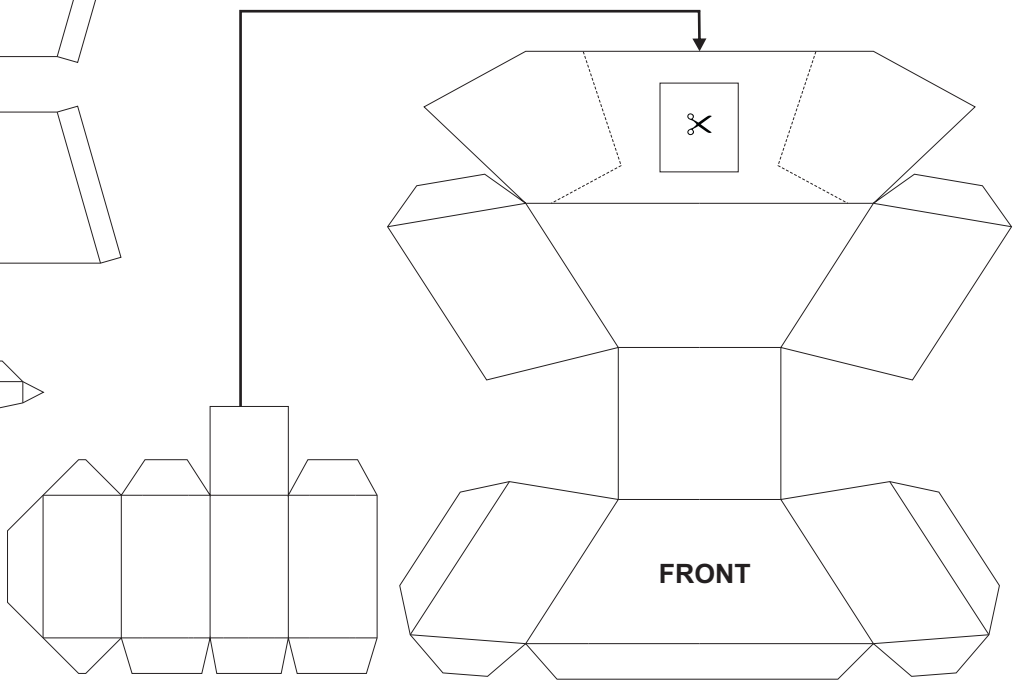

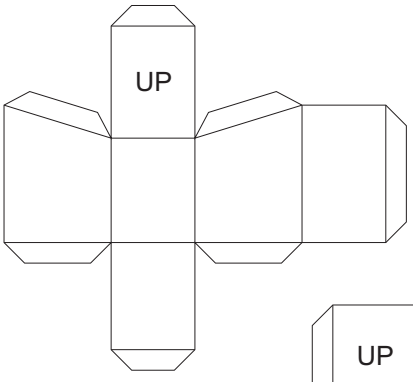

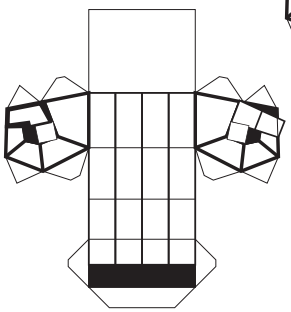

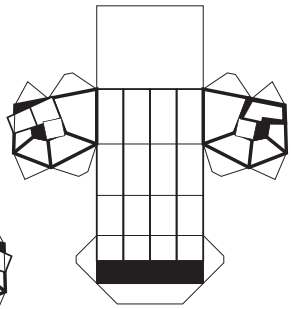

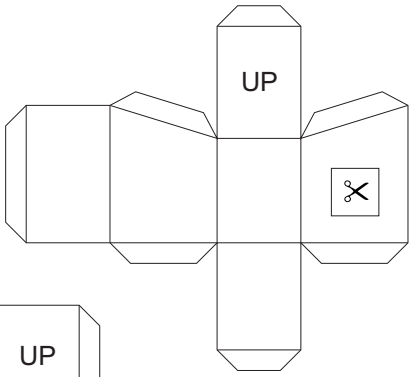

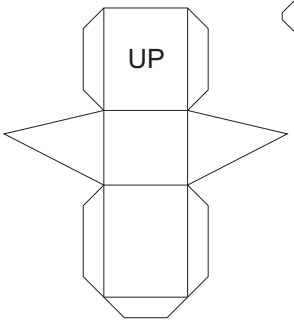

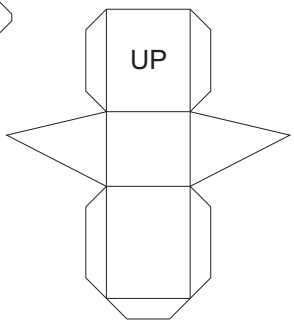

SD RX-93 ν GUNDAM VER.ZAN

E.F.S.F. RAY'S CUSTOMIZE MOBILE SUIT FOR NEWTYPE

YELLOW

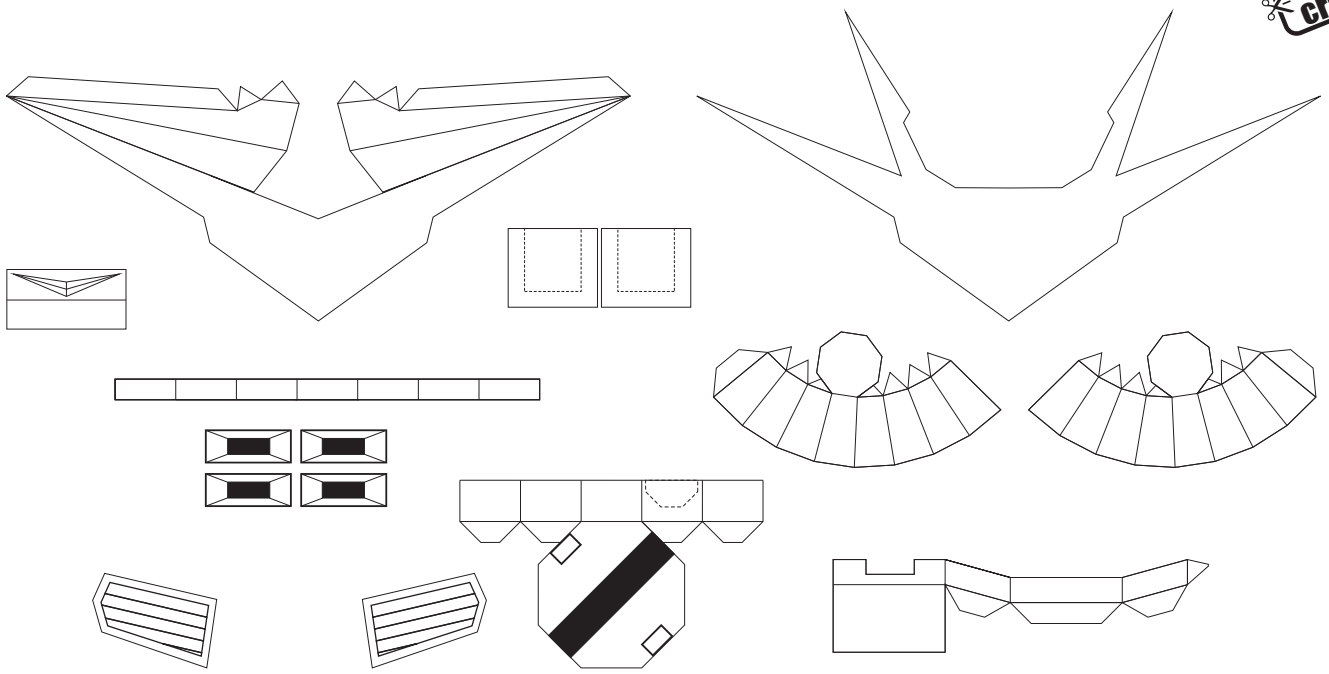

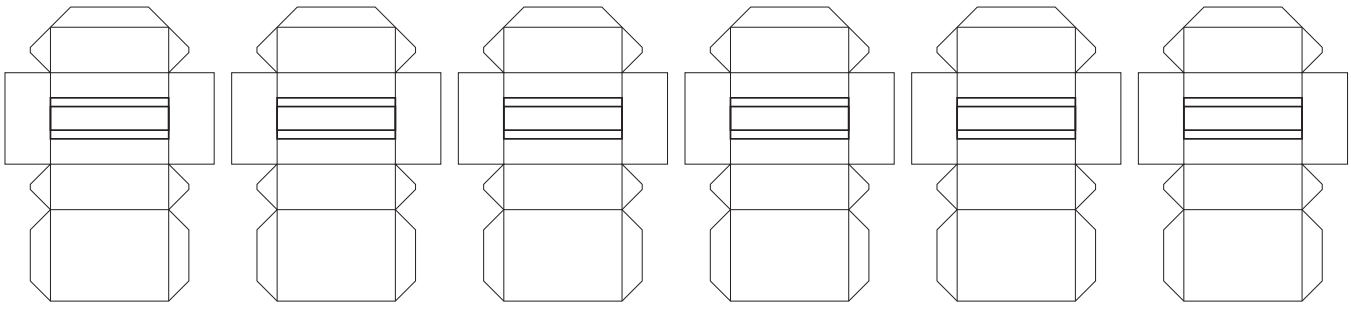

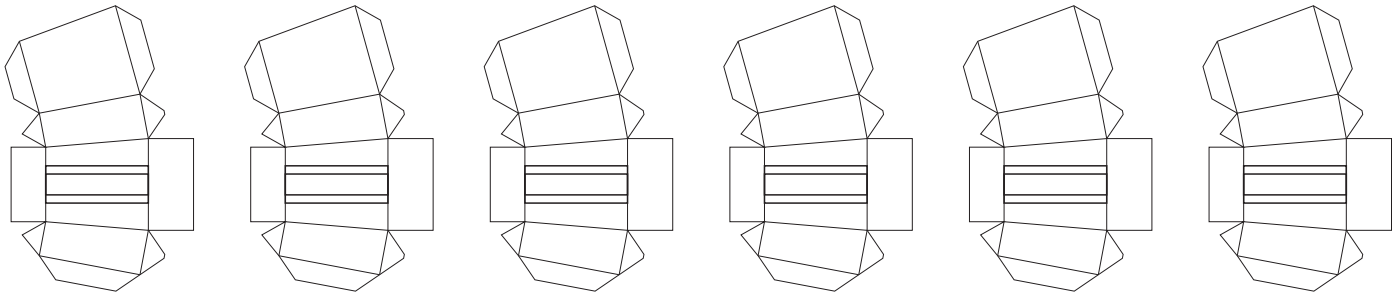

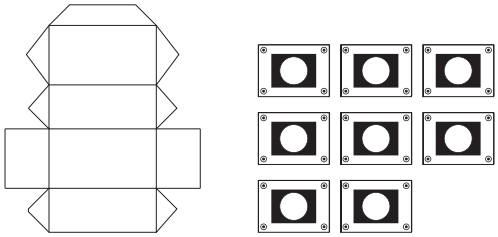

SD RX-93 ν GUNDAM VER.ZAN

E.F.S.F. RAY'S CUSTOMIZE MOBILE SUIT FOR NEWTYPE

RED

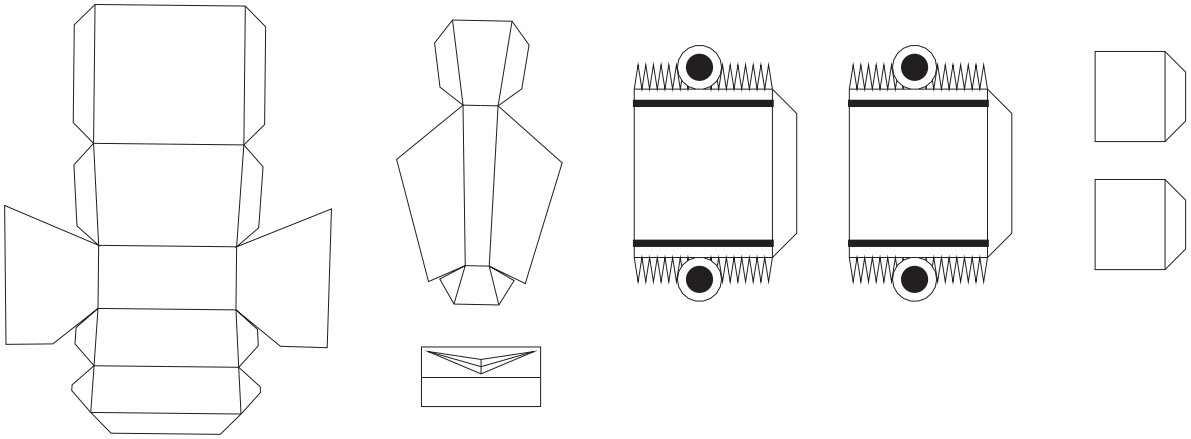

SD RX-93 ν GUNDAM VER.ZAN
E.F.S.F. RAY'S CUSTOMIZE MOBILE SUIT FOR NEWTYPE